ISSN 2395-1621

Multi-Objective Optimization of Rolling Element of Bearing Using Genetic Algorithm

#1Miss.S.G.Deshpande, #2Prof.L.S.Damande

1deshpandeshweta21@gmail.com

#12Department of Mechanical Engineering, Savitribai Pune
SRES College of Engineering, Kopergaon

ABSTRACT

A constraint non-linear optimization procedure based on genetic algorithms has been developed for designing rolling element bearings. Based on maximum fatigue life as objective function and associated kinematic constrains have been formulated.. The constraints contain unknown constants, which have been given ranges based of parameteric studies through initial optimization runs. In the final run of the optimization, these constraint constants are also included as design parameters. In this paper, three primary objectives for a rolling bearing, namely

1.Dynamic capacity (C_d),

2. The static capacity (C_s)

3. Elastohydrodynamic minimum film thickness (H_{min}) have been optimized separately, pair-wise and simultaneously using an advanced multi-objective optimization algorithm .

Keywords— optimization, (EA)- Evolutionary Algorithm , Genetic Algorithms (GA's)

ARTICLE INFO

Article History

Received :18th November 2015

Received in revised form :

19th November 2015

Accepted : 21st November , 2015

Published online :

22nd November 2015

I. INTRODUCTION

The design of rolling bearings has to satisfy various constraints, e.g. the geometrical, kinematics and the strength, while delivering excellent performance, long life and high reliability. This invokes the need of an optimal design methodology to achieve these objectives collectively, i.e. the multi-objective optimisation. In this paper, three primary objectives for a rolling bearing, namely, the dynamic capacity (Cd), the static capacity (Cs) and the elastohydrodynamic minimum film thickness(H_{Min}) have been optimized separately, pair-wise and simultaneously using an advanced multi-objective optimization algorithm: NSGA II (non-dominated sorting based genetic algorithm). These multiple objectives are performance measures of a rolling bearing, compete among themselves giving us a trade-off region where they become ''simultaneously optimal'', i.e. Pareto optimal. A sensitivity analysis of various design parameters has been performed, to see changes in bearing performance parameters, and results show that, except the inner groove curvature radius, no other design parameters have adverse affect on performance parameters.[2]

II. PROBLEM STATEMENT

Non-conventional methods are time consuming and these are limited to optimize only few design parameters. Complex shape and geometry of bearings lead to large number of design variables. That's why non-conventional methods are unable to optimize large number of design variables of a bearings Genetic Algorithm is one of the best optimization technique for solving complex optimization problems. Very little amount of research is carried out on design of rolling bearing as compared to spur and helical gears regarding optimization. Again from above literature we see that every one optimize only one or two objective functions. So in this project I am optimizing Rolling bearing design with multiple objectives.

Design optimum rolling bearing by using genetic alogorithm The optimized design parameters have to be yielded better fatigue life as compared to those listed in standard catalogues. study of optimisation of rolling

bearings..identifying advantages of optimum design of rolling bearings by using genetic alogorithm to obtain objectives for rolling bearing namely dynamic capacity,maximum fatigue life.

III. FINDING

study of optimisation of different method.comparison of other method and genetic alogorithm .based on genetic algorithms has been developed for designing rolling element bearings primary objectives for a rolling bearing, namely, the dynamic capacity (Cd), the static capacity (Cs) and the elastohydrodynamic minimum film thickness (Hmin) Based on maximum fatigue life as objective function and associated kinematic constrains have been formulated.

IV. OBJECTIVE OF PRESENT WORK

The present work involves the optimization of Rolling element of bearing design to increase its fatigue life

1. Study of optimization of different method.
2.Comparison of other method and genetic algorithm
3.Based on genetic algorithms has been developed for designing rolling element bearings
4.Primary objectives for a rolling bearing, namely, the dynamic capacity (C_d),
5. The static capacity (C_s) and
6.The elastohydrodynamic minimum film thickness (H_{min})
7.Based on maximum fatigue life as objective function and associated kinematic constrains have been formulated.

V. LITERATURE REVIEW

Rajiv tiwari etc. all [1]proposed Rolling element bearings design problem has been formulated and a procedure is present to solve the constrained non-linear optimization problem. The assembly angle has been derived in terms of design parameters. Total ten design variables have been considered, out of which five design parameters are: the bearing pitch diameter, the rolling element diameter, number of rolling elements and inner and outer-race groove curvature radii. The remaining five design variables are constants of constraints [1].They are optimized in two stages. First, five constants of constraints are given optimum bounds by initial optimization runs and then all ten design parameters are optimized in final optimization run. For optimization GA has been used, results show improves dynamic capacities as compared to the listed in standards.

Shantanu Gupta etc .all[2] proposed a design methodology for an engine journal bearing. The procedure of selection of the diametral clearance and the bearing length was described by limiting the minimum film thickness, the maximum pressure and the maximum temperature. All the aforementioned literatures were concerned mainly with the journal bearing design. However, internal geometries of journal bearings are far simple as compared to rolling bearings. A work on the multi-objective optimization for the design of rolling bearings does a weighted combination of these individual objective functions namely – the dynamic capacity, the static capacity and the minimum film thickness. The multi-objective problem is converted into a scalar optimization problem. This work made use of the deterministic as well as stochastic algorithms, for solving the constraint scalar optimization problem.

Jin-Dae Song etc all.[3] proposed an optimum design of high-speed short journal bearing using an enhanced artificial life algorithm (EALA) to compute the solutions of optimization problem. The proposed hybrid EALA algorithm is a synthesis of an artificial life algorithm (ALA) and the random tabu search method (R-tabu method) to solve some demerits of the ALA. The emergence is the most important feature of the artificial life which is the result of dynamic interaction among the individuals consisting of the system and is not found in an individual. The artificial life optimization algorithm is a stochastic searching algorithm using the feature of artificial life. The feature of R-tabu method, which prevents converging to the local minimum, is combined with the ALA. One of the features of the R-tabu method is to divide any given searching region into several sub-steps

VI.METHODOLOGY

Non-conventional methods are time consuming and these are limited to optimize only few design parameters Complex shape and geometry of bearings lead to large number of design variables. That's why non-conventional methods are unable to optimize large number of design variables of bearings Genetic Algorithm is one of the best optimization technique for solving complex optimization problems. Very little amount of research is carried out on design of rolling bearing as compared to spur and helical gears regarding optimization. Again from above literature we see that every one optimize only one or two objective functions. So in this project I am optimizing Rolling bearing design with multiple objectives.

Defining the problem statement

⇩

design the mathematical model

⇩

find out variables and constraints

⇩

solve the problem by using genetic algorithm

⇩

Study the Optimization Procedure

⇩

Parameterization

(Solve the model under different boundary conditions for optimization)

⇩

select suitable size of rolling element of bearing

VII. PROBLEM FORMULATION

The geometry of a bearing can be defined by three boundary dimensions, namely, the bore diameter (d=10), the outer diameter (D=30) and the bearing width (B=9). Parameters that help to define the complete internal geometry of a given rolling bearing (i.e. for a given boundary dimensions) are the ball diameter (Dbw), the pitch

diameter of the bearing (D), the inner and outer raceway curvature coefficients (fi and fo), and number of rolling elements (Z). Presence of more than one objective makes the problem come into the domain of multi-objective optimization. . Any constrained multi-optimization optimisation problem is essentially composed of three components, namely, design parameters,objective function and constraints

Calculation of design parameter

The fig. 1 Macro-geometries of a radial ball bearing. The design parameter vector can be defined as, for D=30 ,B=9 d=10

X = [D_m , D_b ,Z, f_i ,f_o ,$K_{Dmin,}$ K_{Dmax} ,E, e, γ]

D_m =20.05, D_b=6.211,Z =7, r_i =3.1987, r_o =3.199,

$K_{Dmin,=}$ 0.4298 K_{Dmax} =0.6342,E=0,300063,e=0.0345,

γ = 0.7143 ϕ_0 =3.7784

Where, f_i= r_i/ D_b ; f_o = r_o/ D_b ;Dm-pitch diameter in mm; Db-ball diameter; e-parameter for mobility conditions ; K_{Dmin}-minimum ball diameter K_{Dmax}-max ball dia. Parameters that define bearing internal geometries are D_m , D_b ,Z, f_i ,f_o Whereas, $K_{Dmin,}$ K_{Dmax} ,Ɛ, e, γ are part of constraints. and do not directly represent any measurement of the bearing internal geometries.[2] The latter are usually kept constant while designing bearings but for the present case these secondary parameters are also considered as variables. Assembly angle ϕ_o bearing also forms an important constraint on the number of rolling elements

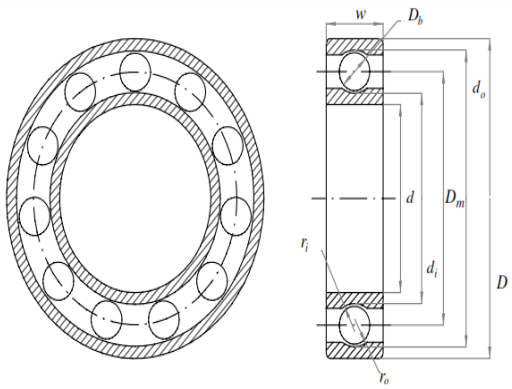

Figure-1. Macro-geometries of a radial ball bearing.

1.Dynamic capacity defined as ‘‘the constant radial load, which a group of apparently identical bearings can endure for a rating life of one million revolutions of the inner ring (for a stationary load and the stationary outer ring)

C_d = $f_c Z^{2/3} D_b^{1.8}$ Db≤ 25.4 mm

$3.647 f_c Z^{2/3} D_b^{1.4}$ Db <25.4 mm

$$fc= 37.91[1 + \left\{1.04\left(\frac{1-\gamma}{1+\gamma}\right)^{1.72}\left(\frac{f_{i(2f_o-1)}}{f_{o(2f_{i-1})}}\right)^{0.41}\right\}^{10/3}]^{.03}$$

$$\left[\frac{(\gamma^{0.3}(1-\gamma)^{1.39})}{(1+\gamma)^{1/3}}\right]\left(\frac{2f_i}{2f_{i-1}}\right)^{0.41}$$

$$\gamma = D_b \cos\alpha / D_m \quad \text{.....[1]}$$

C_d =3580N

Here the factor, c, is not an independent parameter. For the current discussion, the deep groove ball bearing has been considered, for which the contact angle is zero γ = D_b/D_m On careful inspection of it could be observed that the dynamic capacity depends on (2/3)rd to the power of number of roller and 1.8th to the power the diameter of the ball. Hence, during optimisation, we expect that the maximum possible ball diameter would give us better dynamic capacity

2.Elastohydrodynamic minimum film thickness :Another very important requirement for rolling bearings is the longest wear life. This is directly related to the minimum film thickness[2]. Considering the requirement of low wear, the optimisation problem aims at maximizing the minimum film thickness for a given bearing boundary dimensions. The formula for Hmin is applicable for the inner and outer raceways separately therefore, for best results, we maximize the lesser of the two. In Eq. (2), the ring can take on values as the inner or outer ring; see usage in Eq. (3). The complete objective function, for the minimum film thickness, can thus be given as

$$H_{min\,ring} = 3.63 a_1^{0.49} * R_{x,ring}^{0.466} * E_o^{-.117} * Q^{-0.073} \left\{\frac{\pi n_i D_m \eta_o (1-\gamma^2)}{120}\right\}^{0.68} * \left\{1 - exp\left[-0.703\left(\frac{R_{(y,ring)}}{R_{x,ring}}\right)^{0.636}\right]\right\}$$

.....[2]

H_{min}= min ($H_{min,inner,}$ $H_{min,outer}$).....[3]

where i represents number of rows. For the present case, a single-row deep groove rolling bearing has been considered and for this i is equal to 1. Sub-expressions used in the final objective function are listed below

Q = $5F_r$ / iZcosα , $R_{(x,inner)}$=Db/2(1-γ), $R_{(y,inner)}$= $f_i D_b/2f_i$-1

, $R_{(x,outer)}$=Db/2(1+γ), $R_{(y,outer)}$= $f_o D_b/2f_o$-1

H_{min} = 0.20873 µm

give conservative estimates of the elastohydrodynamic minimum film thickness and the maximum load.

3. Static capacity: Defined as that load applied to a non-rotating bearing that will result in the permanent deformation occurring at the position of the maximum loaded rolling element

$$C_{s,inner} = \frac{23.8ZiD_b^2(a_i^* b_i^*)^3 \cos\alpha}{\left(4-\frac{1}{f_i}+\frac{2\gamma}{1-\gamma}\right)^2} \qquad C_{s,outer} = \frac{23.8ZiD_b^2(a_o^* b_o^*)^3 \cos\alpha}{\left(4-\frac{1}{f_i}-\frac{2\gamma}{1+\gamma}\right)^2} \text{.....[4]}$$

C_s = min($C_{s,inner}$ $C_{s,outer}$).....[5]

C_s =3672.966 N

Where,

a_i^* = non dimensional major axis for the inner raceway contact

a_o^* = non dimensional major axis for the outer raceway contact

b_i^* =minor axis inner

b_o^*=minor axis outer

4. Constraints: reduce the parameter space to the feasible parameter space. This section summarizes the nine problem constraints. Apart from geometrical constraints, we also maintain an intuitive constraint on the number of balls in a given bearing. The first constraint, for the maximum allowance on the assembly angle is

$\phi/(2\sin^{(-1)}(D\_b / D\_m)) - Z+1 \geq 0$

The ball diameter gets an upper and lower bound, through following constraints

$2D_b - K_{Dmin}(D-d) \geq 0$,
$K_{Dmin}(D-d) - 2D_b \geq 0$
Constrain for the maximum allowable diameter of the ball, is
$\wp B_w - D_b \leq 0$
we must insure that the difference between the pitch diameter and the average diameter in a bearing should be less than a certain value. The inner ring thickness must also be more than the outer ring thickness, therefore,
$Dm-0.5(D+d) \geq 0, (0.5+e)(D+d) - Dm \geq 0$,
The thickness of a bearing ring, at the outer raceway bottom, should not be less than eD, where e is a parameter obtained from the simple strength consideration of the outer ring. The constraint condition is then
$0.5(D - Dm - Db) - \mathcal{E}\, Db \geq 0$,
The groove curvature radii of the inner and outer raceways of a bearing should not be less than 0.515 D[2]

VIII.MULTI-OBJECTIVE OPTIMIZATION.

Formally, the multi-objective optimization refers to the solution of problems with two or more objective functions, which are normally in conflict with each other. Such trade-off fronts are also termed as Pareto optimal fronts, named after Vilfredo Pareto who stated this concept in 1896 . The problem of multi-objective optimization can be represented mathematically as,

optimize $f(p)=\begin{bmatrix} f(p)_1 \\ f(p)_2 \\ f(p)_n \end{bmatrix}$ subjected to $C(p)\geq 0$; $n\geq 2$

Here, p represents the parameter vector, f(p) represents the objective vector and c(p) represents the constraints vector. In remainder of this paper, without loss of generality, all the optimisation would be of minimization type, since one can always convert a maximization into minimization by multiplying it with a (-1)
In the multi-objective optimization, a solution vector x =[x1 x2, ... xn] is considered more optimal than vector y =[y1 y2, ... yn] if x dominates y as in Eq. (27). This implies that all elements in x are smaller than or equal to corresponding elements in y, and at least one of them in x is strictly smaller than its counterpart in y. multi-objective optimisation problem for rolling bearings. The module allows user to specify boundary dimensions of the bearing, choose objectives of interest, vary parametric ranges and specify sensitive GA parameters. Real coded chromosomes were used to encode nine design parameters Problem constraints were incorporated using the standard constraint handling technique [2]. Problem parameters were given the strict upper and lower bounds to reduce the solution space. Operating conditions are listed in following table. [2]

TABLE I

Parametric bounds	Operating conditions
Dm = {0.5(D+d),0.6(D+d)} Db={0.15(D-d), 0.45(D-d)} Z=(4,50) f_i= (0.515,0.6) f_o =(0.515,0.6) K_{Dmin}= (0.4,0.5) K_{Dmax} =(0.6,0.7) $\mathcal{E}$=(0.3,0.4) E=(0.02,0.10)	α_1 = 1e-08 η_0 =0.02 n_i =5000 E_o=2.25e+11 F_r =15000
$\wp$=(0.6,0.85	

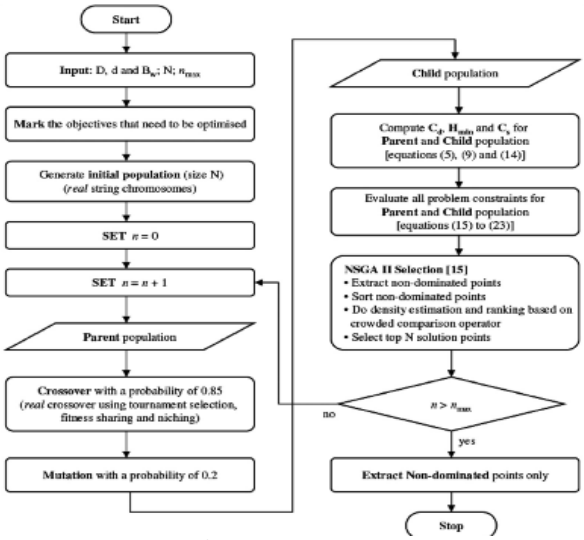

Figure 2- Application of NSGA II to the multi-objective optimization of rolling element bearings.

A step-by-step procedure for solving the given optimization problem is illustrated in fig2.The figure assumes understanding of the basic GA terminology. The population size, the generation count, the crossover and mutation probabilities were determined after multiple runs of the algorithm with the aim of obtaining best solutions. Best here implies the maximum spread of solution points and high values of all the objectives simultaneously. The best results were decided from a solution set of 20 runs with varying mutation and crossover probabilities.
As an example of the optimized bearing design obtained, fig 3 shows the axial and radial cross-sectional views for a typical bearing (boundary dimensions D = 30 mm, d = 10 mm and Bw = 9 mm) after dynamic capacity optimization using the approach discussed in this paper.
Each of these optimizations is a single objective optimization. also compares dynamic capacities of optimized bearings with the existing standard .In order to compare the increase in the fatigue life of the designed bearings using GAs against the standard values, the relation shown in following Eq. has been used. The subscripts d_new and d_std represent the new values computed using GA and those currently available in standards, respectively,
$\lambda = (C_{d\_new} / C_{d\_std})^3$

IX. RESULTS AND DISCUSSION

TABLE II

Objective function	std	new
Dynamic capacity	3580N	5511.5N
Static capacity	3672.96N	3401.9N
Elasto hydrodynamic thickness	0.2193 µm	0.2096µm

By using this results we obtained optimized design of rolling bearing.

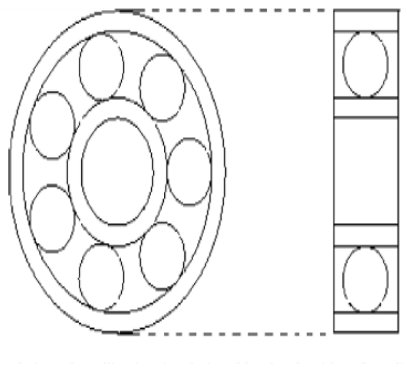

Figure 3- Radial and axial cross-sectional view of a rolling bearing designed by the algorithm

- 5. Parameterization

Parameterization means optimizing the results of an analysis. It is probably the most important step in the analysis. At the time of manufacturing, it is not uncommon to see 0.5–1% deviation in the design parameter values. To better evaluate a bearing design, it is important to observe the sensitivity in the values of the obtained performance measures with respect to such parametric variations. This section attempts to answer this concern, of designs obtained by using the approach discussed in this paper. Out of all parameters detailed above the ones that influence the performance measures and can suffer from manufacture tolerances are Dm Db, fi and fo Therefore, we will study the performance impact of varying these parameters by a maximum of 1% around a given nominal optimized solution point. Variation in parameters has been done, by generating random points within a 1% neighborhood of the representative point. A uniform distribution was used to generate these random points. For example, when doing the sensitivity analysis with respect to the ball diameter, D_b is varied by 1% around its original value and all other parameters are kept fixed. We will demonstrate the sensitivity of all three objectives with respect to each of these parameters, separately and collectively.

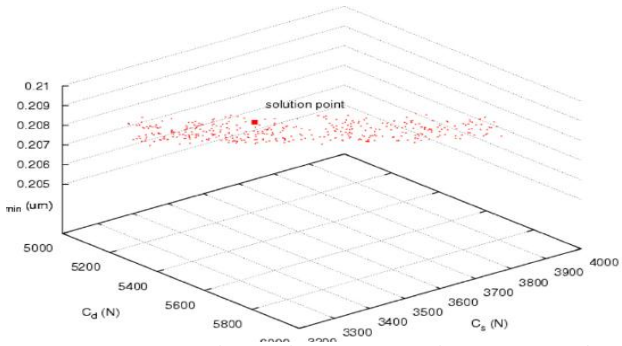

Figure 4- sensitivity of the performance This is for a maximum of ±1% variation in the D_b, Dm, fi, fo

From figure 4 solution point led to a noticeable change 7.5% in the C_d less unaffected from variations in this parameter. and 12.1% change in Cs. Hmin remained more or less unaffected from variations in this parameter.

X. CONCLUSION

The dynamic and static capacities are optimized simultaneously. From result dynamic capacity is maximize from 3580N to 5511.5N and elastohydrodynamic thickness is minimized from 0.2193 µm to 0.2096µm from which we can obtained better design and fatigue life of bearing increases. Use of the geometrically accurate formula for / makes calculations useful for real life bearings. Observation of graphs shows that at the end of each GA generation, algorithm gives out hundreds of trade- off points. A dynamic and static capacity has been found to be very sensitive to variations in the inner raceway cur-vature coefficient.

ACKNOWLEDGEMENT

I wish to thank my institution, 'SRES'S COE, Kopargaon for giving me the opportunity to write this paper. A special thanks to my Project guide Prof.L.S.Damande for encouraging us and his support and guidance throughout and without whom, this work would have not been possible. Last but not the least; I would like to thank the authors of the various research papers that I have referred to, for the completion of this work.

REFRENCES

[1]Rajeswara Rao, Rajiv Tiwari "Optimum design of rolling element bearings using genetic algorithms" 2006

[2]Shantanu Gupta, RajivTiwari.hivashankar B. Nair "Multi-objective design optimisation of rolling bearings using genetic algorithms" (2007)

[3]Jin-Dae Songa, Bo-Suk Yanga,Byeong-Gun Choib,Hyung-Ja Kima "Optimum design of short journal bearings by enhanced artificial life optimization algorithm" Tribology International 38 (2005) 403–412.

[4]Yong xiang Zhang R.B.Randall "Rolling element bearing fault diagnosis based on the combination of genetic algorithms and fast kurtogram" Mechanical Systems and Signal Processing 23 (2009) 1509–1517

[5]Faruk Mendi a, Tamer Bas_kal b, Kurtulus Boran a, Fatih Emre Boran "Optimization of module, shaft diameter and rolling bearing for spur gear through genetic algorithm" Expert Systems with Applications 37 (2010) 8058–8064

[6]Franz-Josef Ebert "Fundamentals of Design and Technology of Rolling Element Bearings" Chinese Journal of Aeronautics 23(2010) 123-136

[7]WY Lin "Optimum design of rolling element bearings using a genetic algorithm–differential evolution (GA–DE) hybrid algorithm

[8]R.V. Chalam Optimum Power Loss Analysis of Radial Magnetic Bearing using Multi Objective Genetic Algorithm

[9]Muhammet Unal "Fault diagnosis of rolling bearings using a genetic algorithm optimized neural network" Measurement 58 (2014) 187–196

